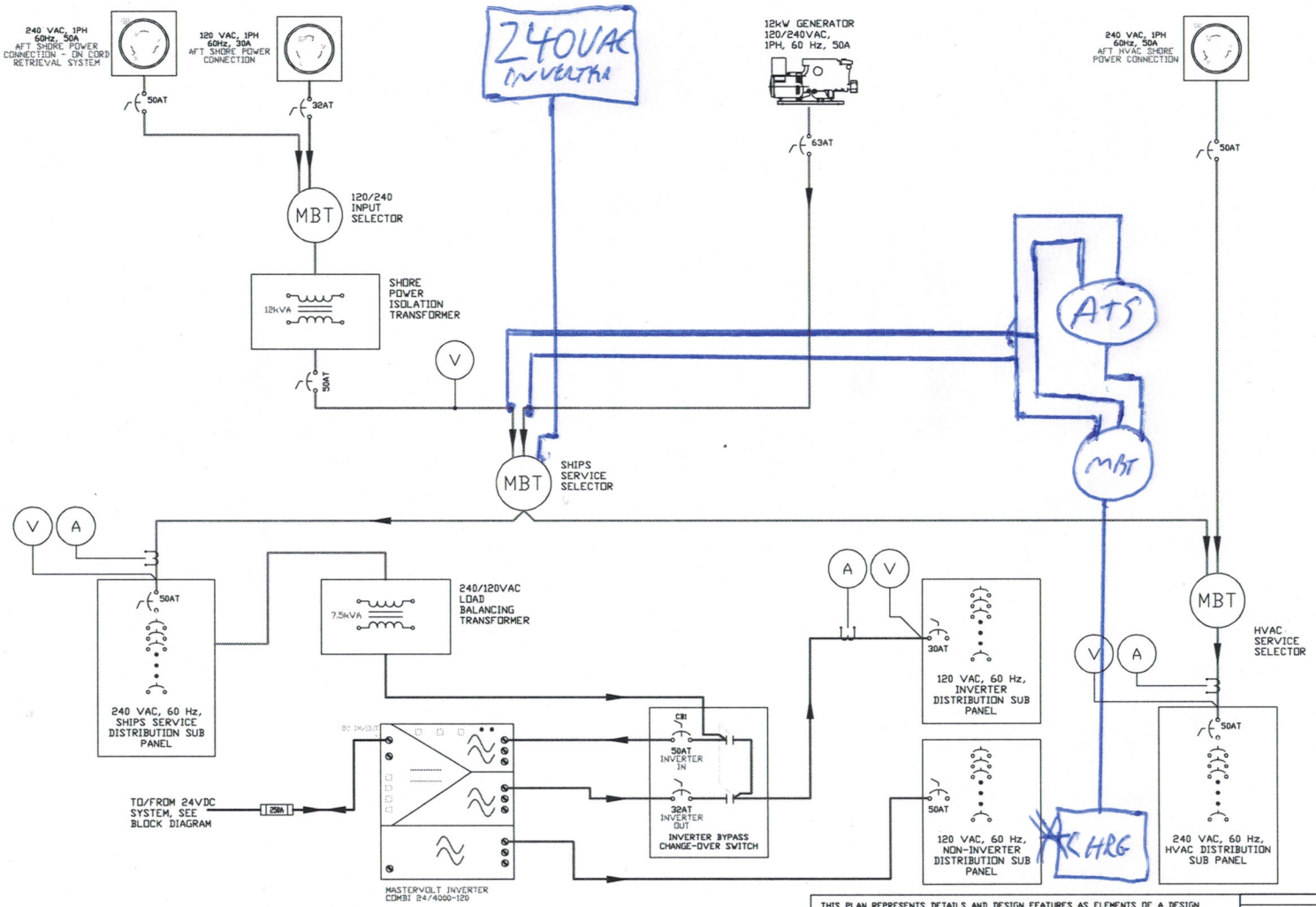

NOTES:

1. THIS DRAWING IS INTENDED TO PROVIDE THE OPERATOR A GUIDE FOR ALIGNING THE BOAT AC ELECTRICAL SYSTEM. NOT FOR CONSTRUCTION.
2. ◄ INDICATED ELECTRICAL CURRENT FLOW
3. RED = 240 VAC, 60 Hz POWER
   BLUE = 120 VAC, 60Hz POWER
   BLACK = DC POWER
4. 60AT — CIRCUIT BREAKER WITH AMPERAGE RATING
5. (V) VOLTMETER
6. (A) AMMETER
7. 250A — FUSE WITH AMPERAGE RATING
8. MBT - MANUAL BUS TRANSFER SWITCH

AS BUILT

THIS PLAN REPRESENTS DETAILS AND DESIGN FEATURES AS ELEMENTS OF A DESIGN DEVELOPED BY BOAT SYSTEMS, INC. AND IS TO BE USED FOR WORK AUTHORIZED IN WRITING BY BOAT SYSTEMS, INC. ANY UNAUTHORIZED USE OR REPRODUCTION, IN PART OR IN WHOLE, WITHOUT THE WRITTEN PERMISSION OF BOAT SYSTEMS, INC. IS PROHIBITED. ALL RIGHTS OF INVENTION AND DESIGN ARE RESERVED BY BOAT SYSTEMS, INC.
Copyright © Boat Systems, Inc. 2009

REVISIONS:	DATE:

BOAT SYSTEMS, INC.
1127 SW Whisper Ridge Trail
Palm City, Florida 34990
Ph. (561) 289-6020 Email: mickey@boatsystems.cc

PACIFIC ASIAN ENTERPRISES

NORDHAVN 52
LONG RANGE MOTOR YACHT
HULL #63 - ELECTRICAL SYSTEM

DESIGNED	DATE	HULL #
M. SMITH	29 FEB 10	HULL #63
CHECKED	DATE	PROJECT #
APPROVED	DATE	CAD FILE REF. N5263-202-011-1.DWG

ELECTRICAL SYSTEM
AC ELECTRICAL SYSTEM
BLOCK DIAGRAM

DWG # 202-01 SH 1 OF 2 REV.